TRICORE

IRIS / IR CUT

雙玻璃系列

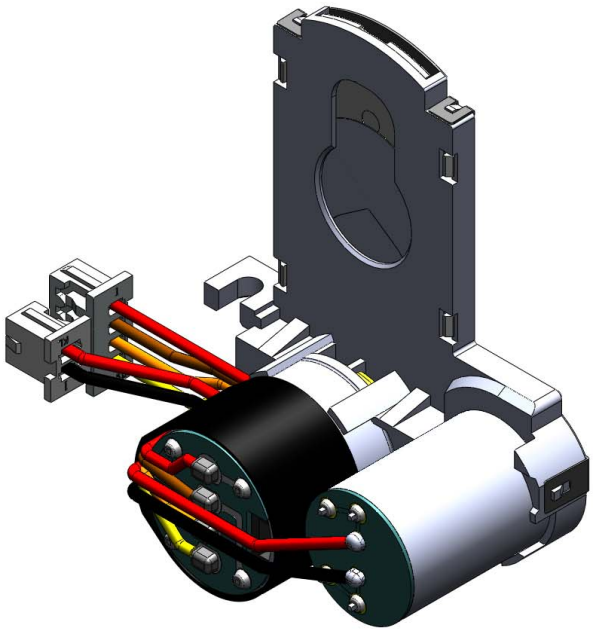

Application

For Security＆Surveillance System

CCTV Lens Van-Focal Auto Iris

Specification 11PSI0700046

Item	Aperture specification
Drive impedance	190Ω±10% (at 20℃)
Braking resistance	465Ω±10% (at 20℃)
Turn on voltage	2.5V max.
Turn off voltage	0.5V min.
Chain wave	0.7V max.

N0.	Item	IR-CUT specification
1	Drive impedance	32±10%Ω(at 20℃)
2	Operating voltage range	5~3.5V (in 1 minute)
3	Operatiang temperature	- 25℃~ + 75℃

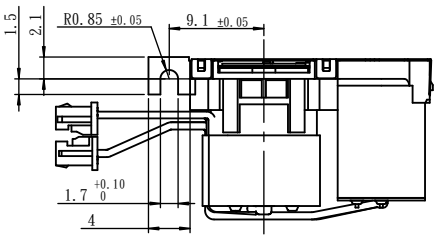

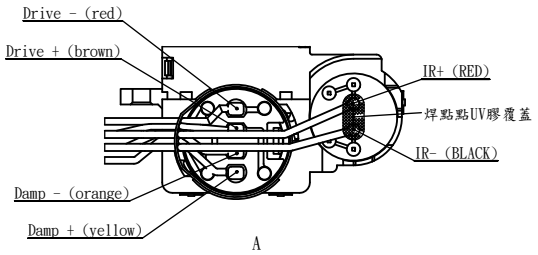

Connect pin assignment & Color		
1	Dumping+	Yellow
2	Dumping-	Orange
3	Drive+	Brown
4	Drive-	Red

	RED	BLACK	GLASS
IN→OUT	-	+	IR
OUT→IN	+	-	AR

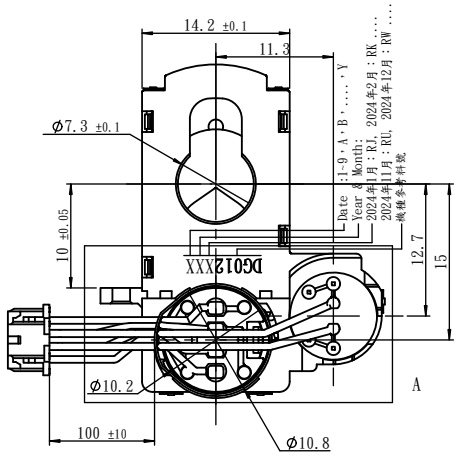

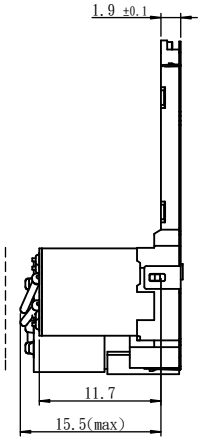

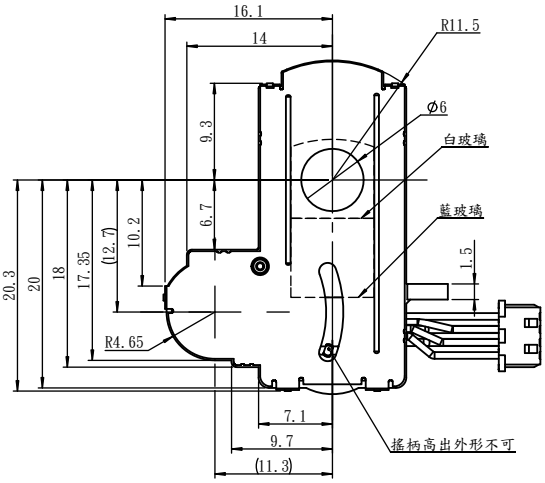

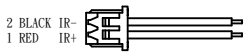

注：1. CONNECTOR：MOLEX 51021-0400 (PITCH=1.25mm)
2. TERMINAL：MOLEX 50058／50079 (MOLEX同等品)
3. SOLDER：LEAD-FREE SOLDERING
4. WIRE：UL3302 AWG #30
5. HOUSING：A2001H-4P

註：
-WIRE：UL3302 AWG #30，7芯，紅色／黑色絕緣PVC披覆
-H.S.G P/N：TU1252HNO-2P
-TERMINAL P/N：TU1252TBO