TRICORE

IRIS / IR CUT

雙磁閥系列

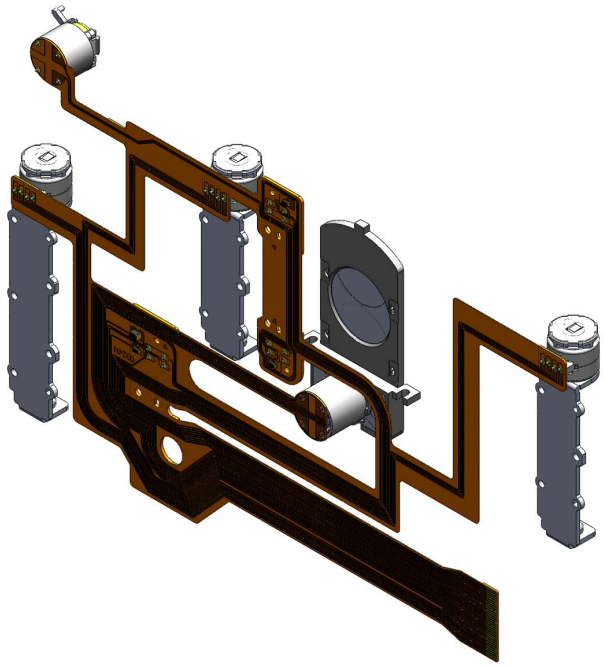

Application

For Security＆Surveillance System

CCTV Lens Van-Focal Auto Iris

Specification 21PSI1600164

N0.	Item	Aperture specification
1	Aperture diameter	Φ16.9
2	Drive impedance	190Ω±10%
	Braking resistance	500Ω±10%
3	Turn on voltage	3.0V The following
	Turn off voltage	0.5V Above
4	Hall output specification	55≦h≦135
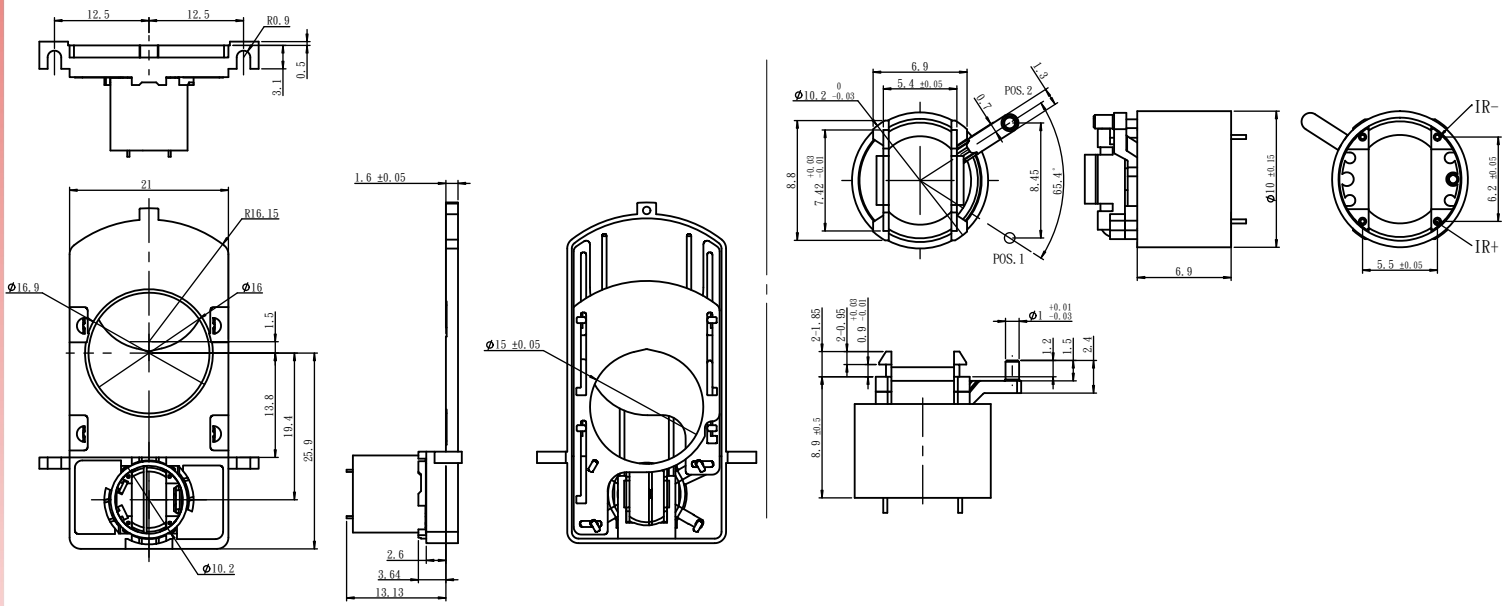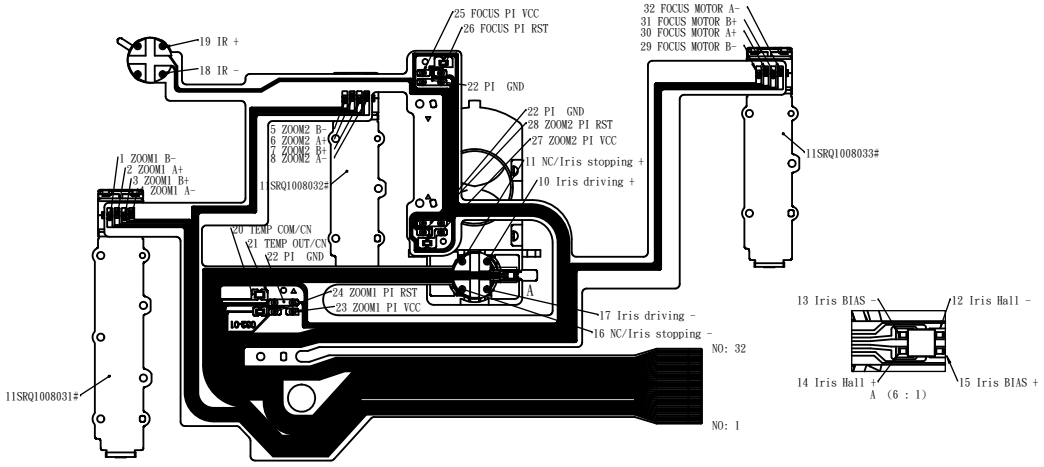
N0.	Item	IR-CUT specification
1	Drive impedance	40Ω±10%
2	Operating voltage	IN → OUT ：+3.5VThe following
		OUT → IN ：-3.5VAbove