TRICORE

VIBRATION MOTOR

BFW12 SERIES

Output : APPROX 0.05~0.25W
Weight : 5.4g (approx)

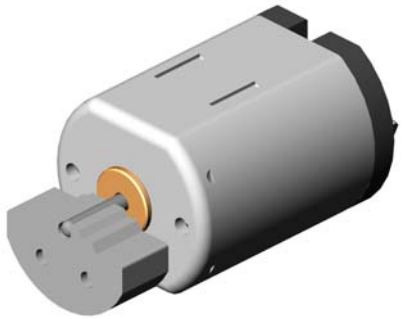

Application

Massager
Toy

MODEL	VOLTAGE		RATED LOAD		
	OPERATING RANGE	NOMINAL	LOAD	SPEED	CURRENT
			g-cm	r/min.	A
21BFW 1215001	1.5~3.0	2.4	VIBRATION WEIGHT	12000	0.17
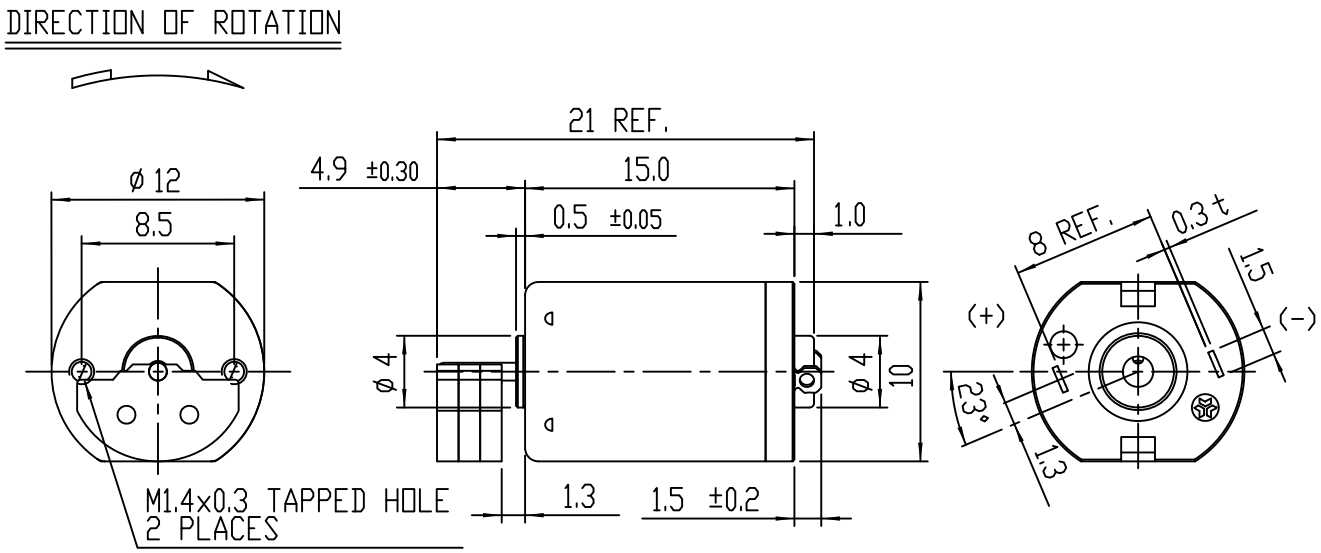
Specification 21BFW1215001